FUJI ELECTRIC

Fuji Instrumentation & Control

Fuji Digital Controller

Compact Controller M<*CC-M*>

ECNO:1127

FUJI Electric declares a multi-loop controller era

Compact Controller M is a multi-loop controller of a new era where functions of 4 controllers are compactly built in a single unit.
Adopting 16 colors liquid crystal display, it indicates abundant information in an easily visible way from multi-loop bar graph display screen to trend screen and menu screen.
Oriented to user friendly operation, the multi-loop controller with innovated operability and functionality configures a flexible system of a high cost performance.

Controller of up to 4 cascade control loops (4 control outputs)

- Up to eight PID controls and 4 control outputs (4-20 mA DC) are available per unit.
- Use of OPTO 22 interface allows to increase auxiliary analog input/output up to 4 points and auxiliary digital input/output up to 32 points in addition to the mainframe input/output (up to 16 points analog input/output & up to 21 points digital input/output).
- For safety processe operation, a backup operation unit for 1 to 4 loops of 4-20 mA DC output can be incorporated.

As an example, the combustion control which was controled by four single loop controllers can be realized by a CC-M.

[Heating furnace/continuous furnace combustion control]

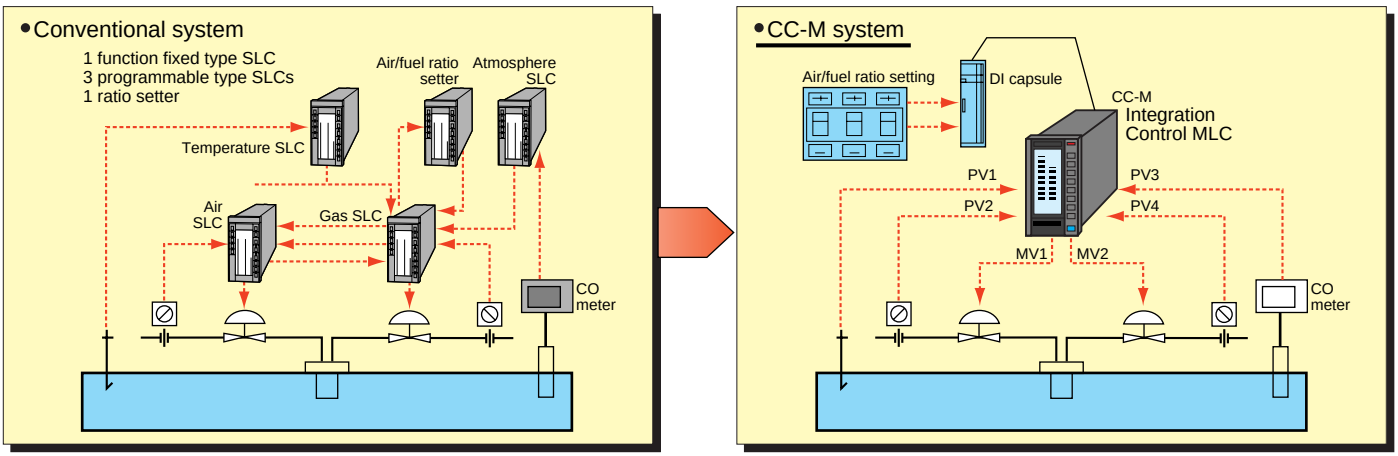

Software PLC functions (option)

- Use of PLC function programming language conforming to international standard IEC 61131-3 allows to execute loop control function and logic control function (ladder: 2 k steps).
  As an example, the loop control which was realized by single loop controller and alarm relay sequence logic can be realized by software in CC-M.

[ANN. Sequence Logic & Loop control]

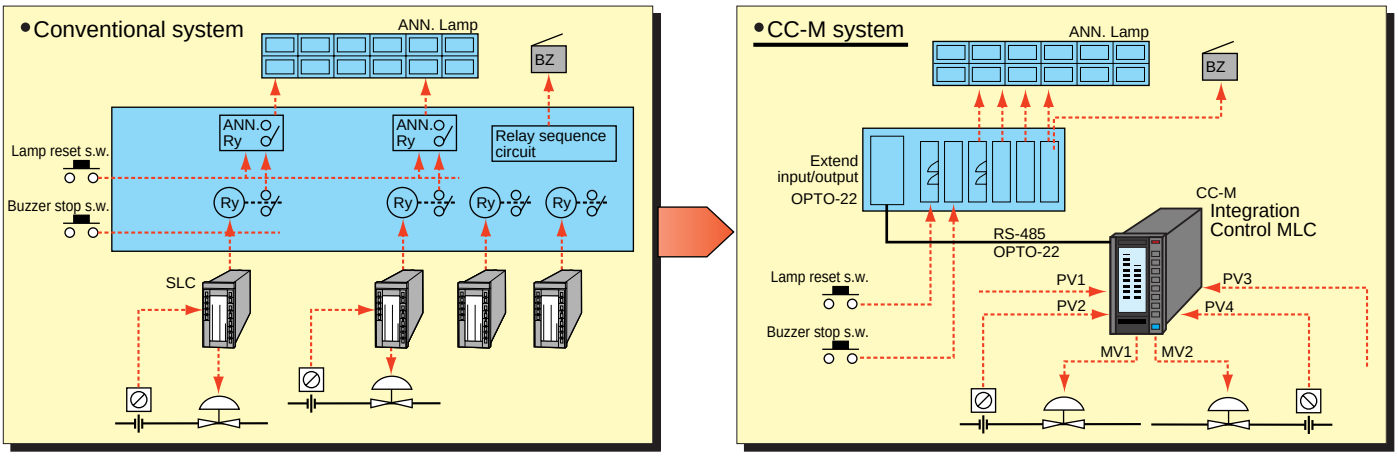

Trend data indication and saving

- Up to 32 trends can be indicated.
- IC memory card can save trend data.
  Storage capacity: Approx. 1.35 million points of data by compact flash memory of 30MB.

Versatile graphic indication

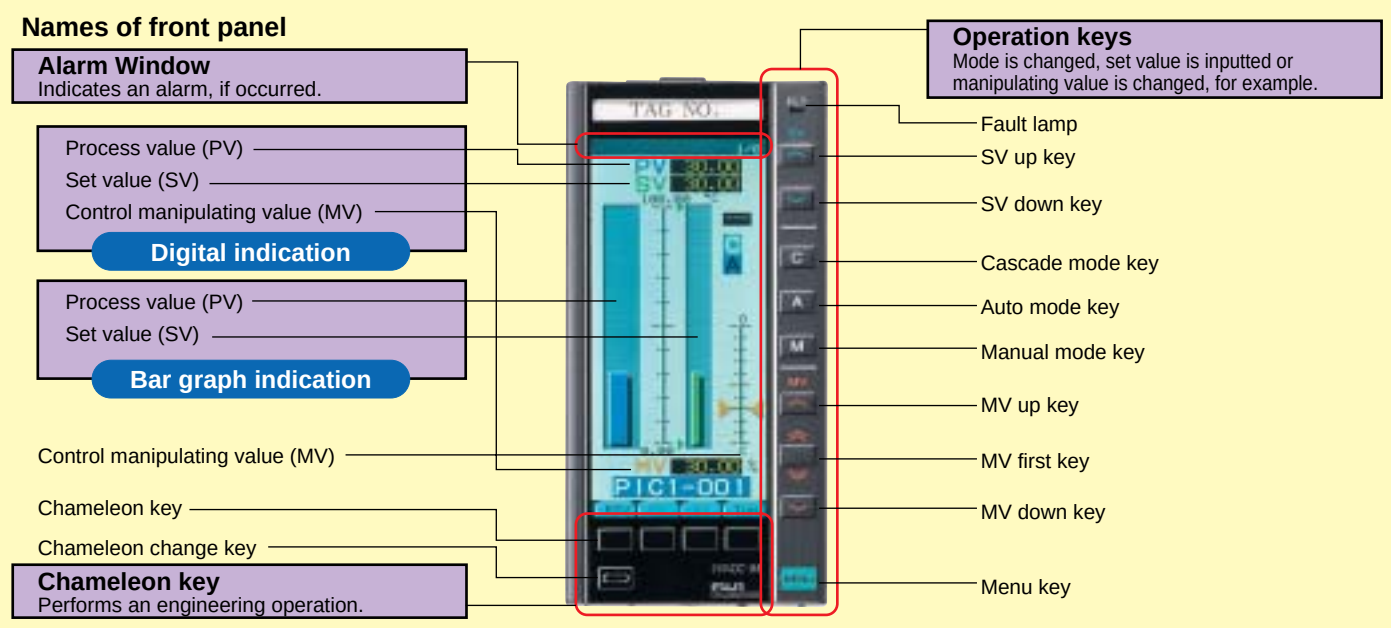

Versatile graphic indication
CC-M has 3 kinds of menu screens. A desired screen is accessed from each menu screen. The menu screen is resumed by pressing the Menu key on any screen.

Menu screen 1/3 can select any of 8 different monitoring/operation screens.

Menu screen 2/3 can mainly select any of 8 different parameter setting screens.

Menu screen 3/3 can select any of 5 different screens related to system definition.

Password function provided for avoiding arong setting

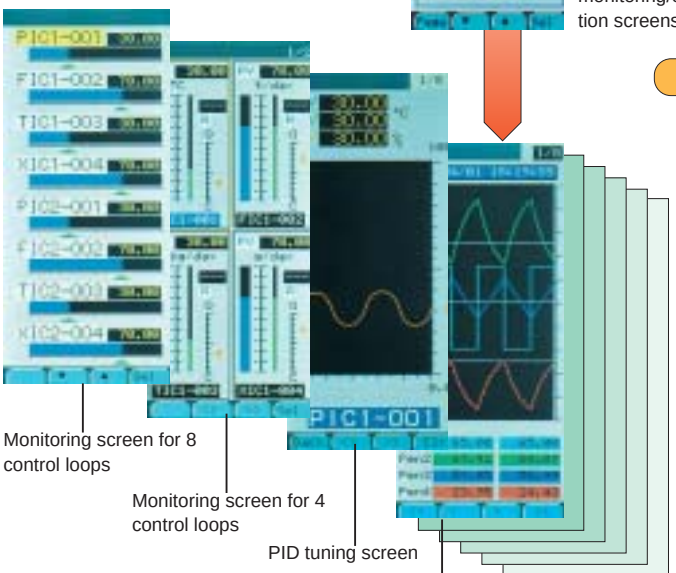

Monitoring screen for 8 control loops

Monitoring screen for 4 control loops

PID tuning screen

Trend screen

Besides, 2 control loop screen, 1 control loop screen.

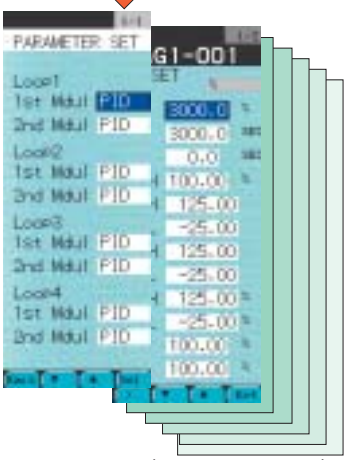

Parameter setting screen, segmented line table setting screen, alarm setting screen, etc.

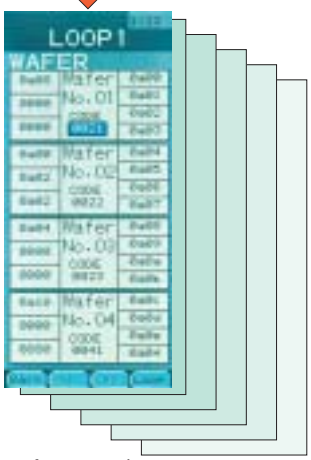

Wafer connection screen, system definition screen, function definition screen, communication setting screen, etc.

Support screen which further substantiates the supervision of process statuses

- Alarm logging screen : Records alarm ON/OFF times, alarm kinds and Tag No.
- Alarm status screen : Indicates currently occurred alarm.
- Input/output indication screen : A screen capable of monitoring all input/output data is provided.
  AI, AO, DI & DO monitoring
  Communication data
- Wafer input/output monitoring screen : Monitors all internal computation data.
  Analog data, ON-OFF data
- Indication loop setting screen : Can indicate arbitrary analog data as a loop.

Configuration

[Programming loader]

CC-M configuration is made by dedicated PC software. Created configuration data are downloaded by using a transmission cable and can immediately be executed. Dedicate monitoring package software which is able to connect up to 8 CC-M through Modbus interface is available.

[Software PLC]

Using the PLC control language conforming to IEC 61131-3, a program is created on PC. Programming software used is ISaGRAF®. A program corresponding to 2 k steps of ladder can be created. Ladder diagram, sequential function chart, function block diagram, structuring text and instruction list can be handled.

Configuration is also available by graphic display unit and keys.

Wafer connection

Software of CC-M is configured by combination of function-software package called "Wafer".
Approximately 100 types of wafer are available beforehand. On CC-M, control and computation function can be built up by registering the wafer code and connected destination I/O terminal code.
For example, an input for first-order PID computation is available from the mainframe screen using wafers No. 21, 22 and 23.

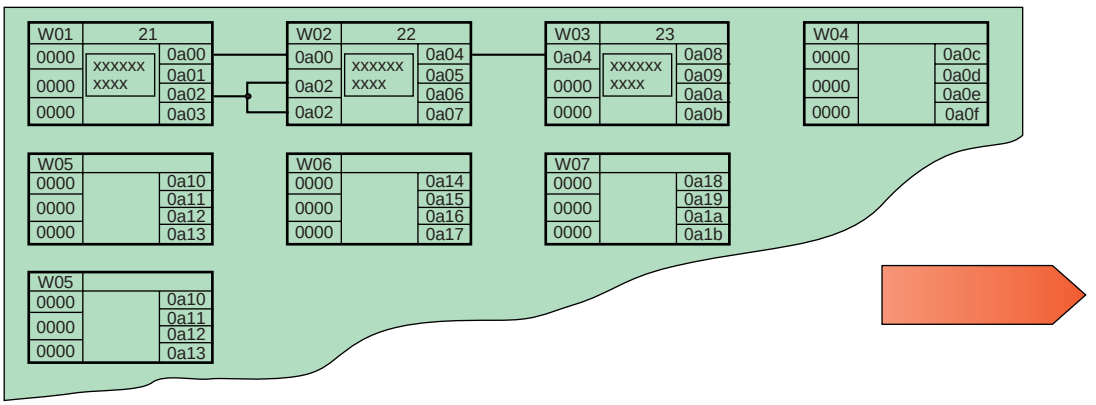

CC-M Viewer

CC-M Controller and CC-M Viewer can offer high cost performance control & monitoring system.
A new monitoring package software called "CC-M Viewer" can now be worked on Windows NT machine. A maximum of eight Compact Controller-M units can be connected via RS485 (Modbus protocol) network. Because extended I/O devices can be connected at the lower link of each CC-M, a small-scale PC based control system can economically be configured.

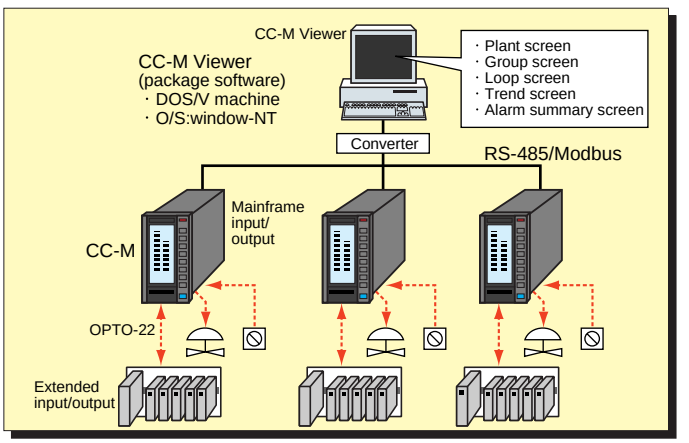

Open network

The host communication of CC-M adopts MODBUS protocol. Connected to PLC or PC of different brands, CC-M monitoring and operation are available.
For downward communication, versatile I/O of OPTO22 can be connected by MISTIC protocol.

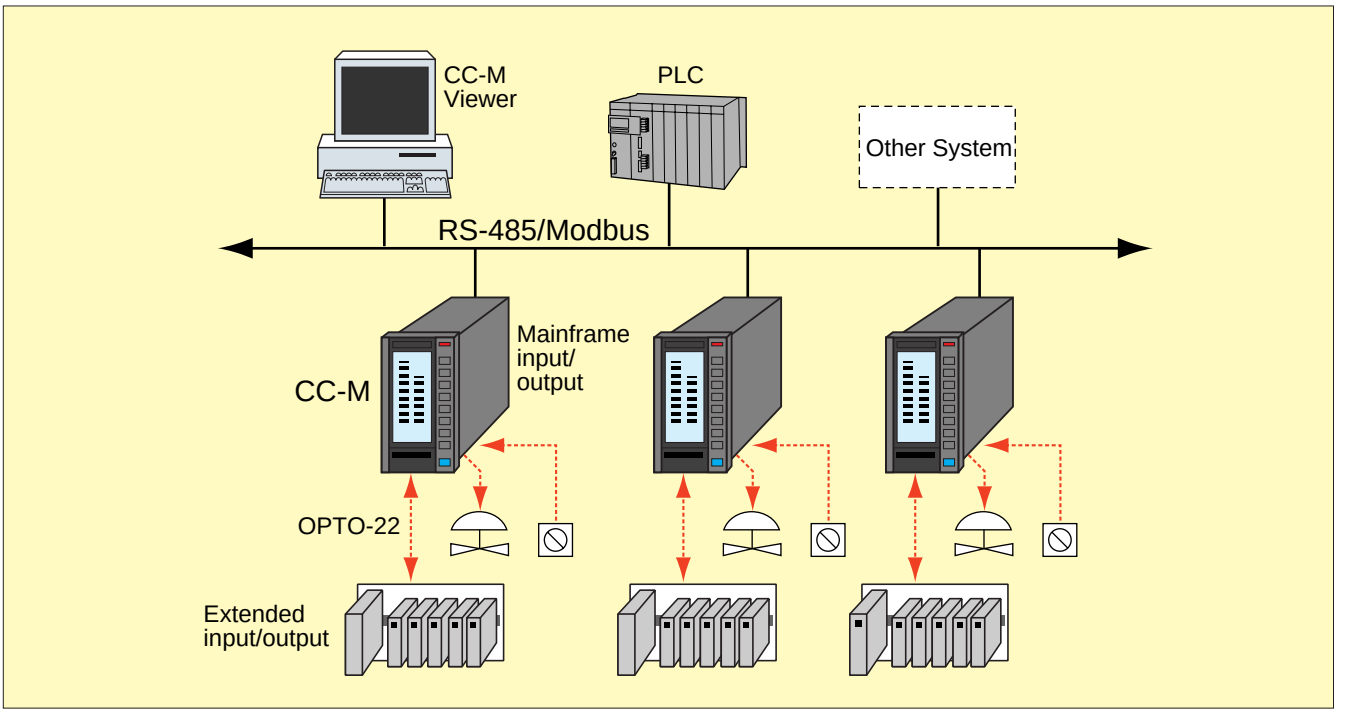

Abundant control functions

- Single loop control
- Multi-loop control
- Cascade control
- Ratio control
- Program control
- Multi-point input selection control
- Various advanced control
- Software PLC + loop control

Examples of application system

- Water treatment
  Water distribution control, pump control, chemical injection control
- Utility plant
  Water supply control, drum water level control, combustion control
- Combustion furnace
  Batch type furnace, continuous furnace
- City gas
  Manufacture process, heating power adjustment, distribution control
- Incimerator plant
  Combustion temperature control, blower and exhaust control
- Others
  Autoclave instrumentation, open channel flow computation, multi-point gas analyzer switching computation

SPECIAL ATTENTION NEEDED for all Micro Controller X series products

(Please read carefully the following instructions.)

⚠WARNING Over-temperature Protection

Any control system design should take into account that any part of the system has the potential to fail.

For temperature control systems, continued heating should be considered the most dangerous condition, and the machine should be designed to automatically stop heating if unregulated due to the failure of the control unit or for any other reason.

The following are the most likely causes of unwanted continued heating:

1) Controller failure with heating output constantly on
2) Disengagement of the temperature sensor from the system
3) A short circuit in the thermocouple wiring
4) A valve or switch contact point outside the system is locked to keep the heat switched on.

In any application where physical injury or destruction of equipment might occur, we recommend the installation of independent safety equipment, with a separate temperature sensor, to disable the heating circuit in case of overheating.

The controller alarm signal is not designed to function as a protective measure in case of controller failure.

Fuji Electric Co.,Ltd.

Head office
11-2 Osaki 1-chome, Sinagawa-ku, Tokyo,141-0032 Japan
http://www.fujielectric.co.jp/eng

Fuji Electric Instruments Co.,Ltd.

Sales Div.
International Sales Dept.
No.1 , Fuji-machi, Hino-city, Tokyo,191-8502 Japan
Phone : 81-42-585-6201,6202
Fax : 81-42-585-6187,6189
http://www.fic-net.co.jp/eng

Information in this catalog is subject to change without notice.

Printed in Japan 2002-3/20FIS